HEIMBERG

TECHNICAL DATASHEET

HEIMBERG- FLORA CONCEALED BATH SHOWER CONBINATION

SPECIFICATIONS INFORMATION

Product Model Number : HBM-FLO-175- OB
Surface Treatment Old Brass
Product Mode Single Lever Concealed Bath/Shower Mixer with Diverter, With Hand Shower and Arm And Head 30 Cm, Chrome plated
Material : Body : Brass, Shower arm: SUS Head shower: SUS Hand shower: Brass Bracket: Brass Shower hose: SUS Cartridge : 35mm Sedal Cartridge Connection Size : 1/2”
Recommended water pressure : 0.5-5bar
MAX Pressure : 16 bar
Hot water inlet temperature 90℃
Recommended operating temperature (energy saving) : 45℃
Attention: If the static pressure exceeds 5bar, a pressure reducing valve must be installed to avoid the pressure difference when the hot and cold water is supplied
Technical Information :
Wall Concealed Bath/Shower Mixer with Diverter, With Hand Shower and Arm and Head 30 cm
Single Lever
Shape: Square
Included :
Wall Concealed Bath/Shower Mixer Body
Shower arm with 30 X30 Cm Shower Head
Hand Shower, Shower Bracket with Shower Hose
Panel And handle
E-box

DRAWING

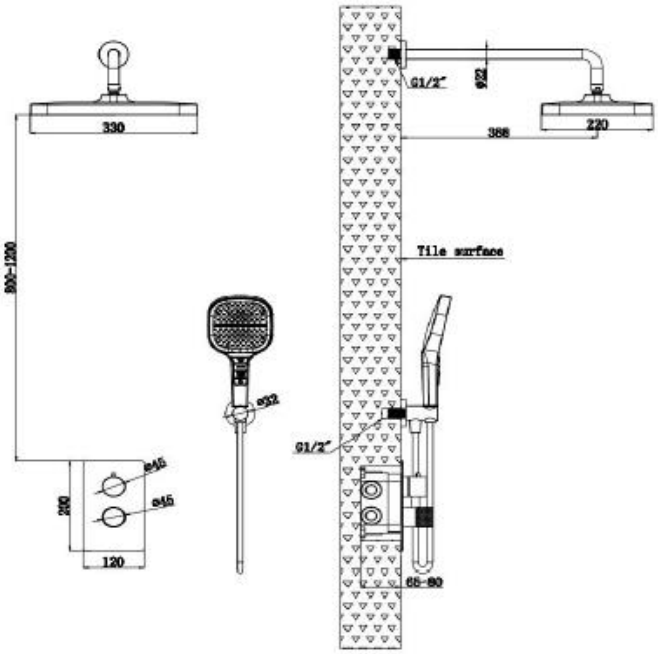

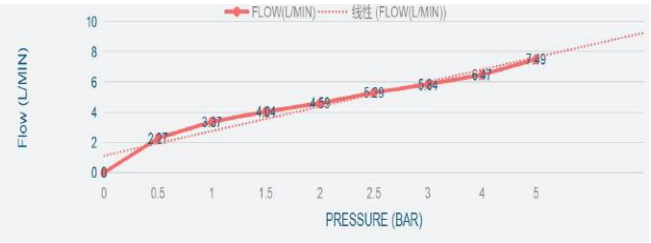

For more information’s about this product or our full product range please contact us:
Email: info@heimbergintl.com

HEIMBERG